REVISIONS		
REV.	DESCRIPTION	DATE
A	FIRST RELEASE	11/28/16

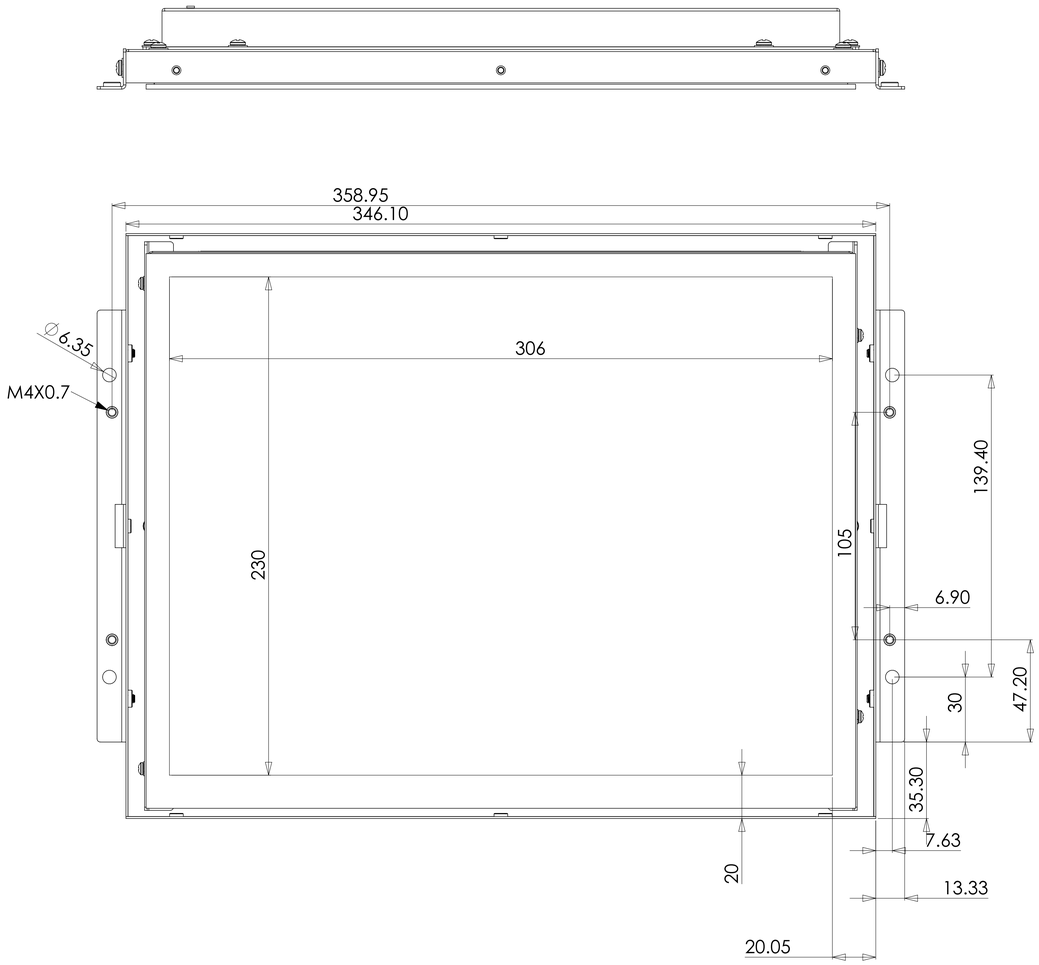

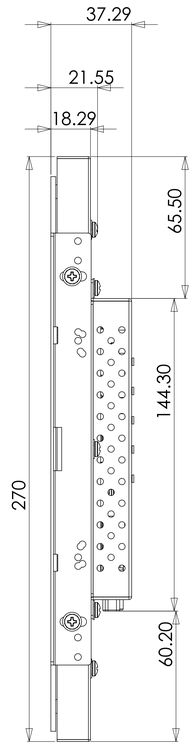

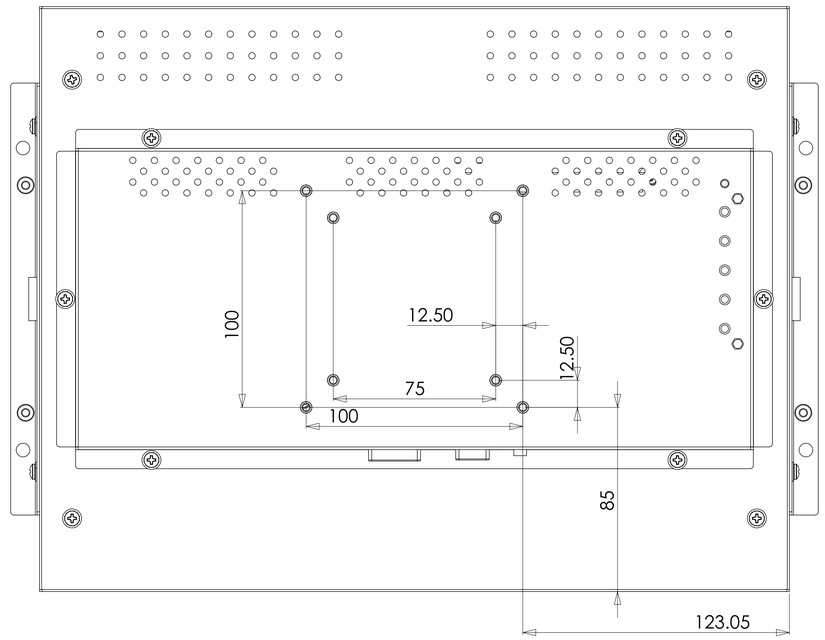

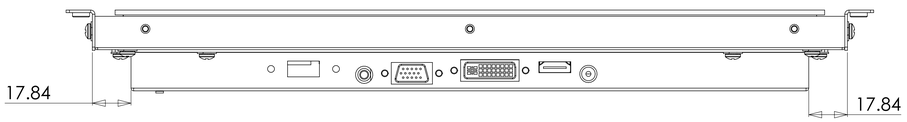

THE INFORMATION CONTAINED IN THIS DRAWING IS THE SOLE PROPERTY OF PREMIO INC. ANY REPRODUCTION IN PART OR AS A WHOLE WITHOUT THE WRITTEN PERMISSION OF PREMIO INC. IS PROHIBITED.

UNLESS OTHERWISE SPECIFIED:
DIMENSIONS ARE IN MILLIMETERS
SURFACE FINISH:
TOLERANCES: 0.25MM[±0.01]
LINEAR:
ANGULAR: ± 1 DEG BEND MIN.

OPEN FRAME DISPLAY WITH PANEL MOUNT BRACKET

DEBUR AND BREAK SHARP EDGES

DO NOT SCALE DRAWING

REVISION A

PREMIO INC.

	NAME	SIGNATURE	DATE
DRAWN	STEVE	SW	11/28/16
CHK'D	HARRISON	HL	11/28/16
APPV'D	HARRISON	HL	11/28/16
MFG			
Q.A.			

WEIGHT:

PI-NF150

DWG NO. 16110202

SCALE: 1:1

SHEET 1 OF 1