PROPRIETARY MODULE

EBIO-4ETH

EDGEBoost I/O Module with 4x LAN Ports

Features

EDGEBoost I/O module supporting 4x GbE LAN ports for wired connectivity. Optional Power over Ethernet support is available through an additional add-on module

- 4x RJ45 1GbE LAN Ports
- Intel® Ethernet Controller I350
- PCIe x1 Gold Fingers Interface (PCIe 3.0 x4 Performance)
- Occupies x1 EDGEBoost Bracket

Specifications

LAN Chipset	Intel® Ethernet Controller I350
Interface	PCIe x1 gold finger (PCIe 3.0 x4 performance)
Additional I/O	4x RJ45 GbE LAN Ports
I/O Bracket	Occupies x1 EDGEBoost Bracket
Standards and Certifications	UL, CE, FCC Class B

Available Models

- PEMODNET4XLAN1G-3000CFL
  EBIO, LAN, 4xRJ45, 1G (RCO-3000-CFL)
- PEMODNET4XLAN1G-3000CML
  EBIO, LAN, 4xRJ45, 1G (RCO-3000-CML)
- PEMODNET04001G-B
  EBIO, LAN, 4xRJ45, 1G (RCOACO-6000/6000-CFL/CML/ADL)

Dimension (Unit: mm)

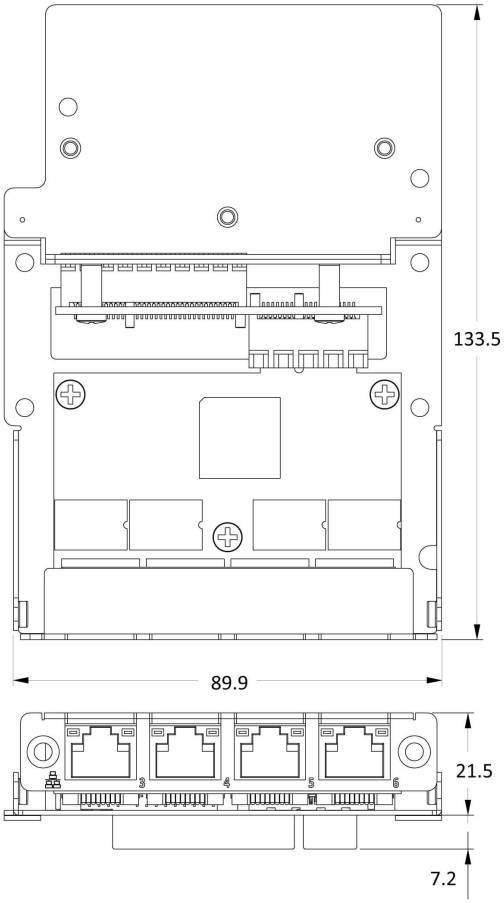

External I/O Mechanical Layout

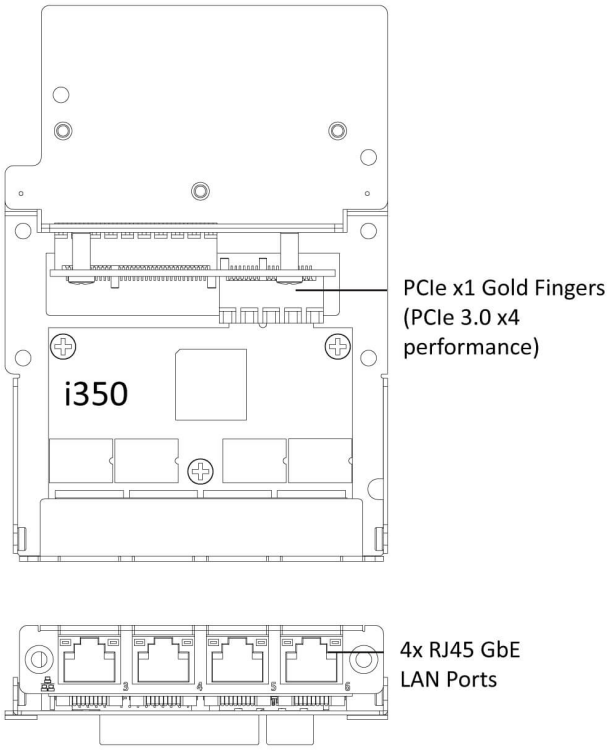

* All specifications and photos are subject to change without notice.

Compatible Products

RCO-6000-RPL Industrial Computer W/ LGA 1700 For Intel 12/13th Gen CPU & R680E PCH

RCO-6000-RPL Series - Unleash the potential of the 13th Gen Intel® Processor, complemented by scalable AI accelerators for superior edge intelligence. This workstation-grade, fanless computer harnesses cutting-edge technologies, including DDR5, PCIe Gen 4, GPU accelerators, and NVMe storage for rapid performance.

- 13th Gen Intel® Core® Processor (35W TDP)
- Up to 64GB DDR5 (ECC & Non-ECC)
- 2x EDGEBoost I/O Brackets
- 1x M.2 E-Key
- 2x SATA SSD Bays (1x Hot-swappable)
- PCIe Gen 4.0 EDGEBoost Node Compatible (NVMe Storage, GPU Support, & PCI/PCIe Expansion)
- UL Listed, CE, FCC Class A Certified

See Product

RCO-6000-CML AI Edge Inference Computer with 10th Gen Intel® Core™ Processor

The RCO-6000-CML series is a flagship high-performance industrial computer purpose-built to process data-heavy workloads in real-time. When paired with an EDGEBoost Node, blazing-fast NVMe storage and Edge AI accelerators are unlocked for streamlined AI inferencing and machine learning.

- 10th Gen Intel® Core/Xeon Processor
- Max. 64GB DDR RAM (ECC & Non-ECC)
- 4x SATA SSD Bay (2x External Hot-Swappable, 2x Internal)
- On-board M.2 E-Key
- Compatible with EDGEBoost Nodes (Dedicated GPU and/or U.2 NVMe Storage)
- 2x EDGEBoost Bracket

See Product

ACO-6000-CML In-Vehicle Computer with 10th Gen Intel® Core™ Processor

The ACO-6000-CML series is a flagship high-performance in-vehicle computer that meets railway and automotive certifications (EN50155 & E-Mark). This industrial computer delivers exceptional connectivity by supporting up to 16 IoT devices for enhanced intelligent transportation.

- 10th Gen Intel® Core/Xeon Processor
- Max. 64GB DDR RAM (ECC & Non-ECC)
- 4x SATA SSD Bay (2x External Hot-Swappable, 2x Internal)
- Up to 16x IoT Ports
- EN50155 & E-Mark Certifications
- 2x EDGEBoost Bracket

See Product

RCO-6000-CFL AI Edge Inference Computer with 9th Gen Intel® Core™ Processor

The RCO-6000-CFL series utilizes a split-architecture to consolidate resource-intensive AI workloads in real-time while providing power and connectivity to IoT devices.

- 9th Gen Intel® Core™ Processor
- Max. 64GB DDR4 RAM
- High-Speed I/O On-board
- 4x SATA SSD Bay (2x External Hot-Swappable, 2x Internal)
- On-board M.2 M-Key
- Compatible with EDGEBoost Nodes (Dedicated GPU and/or U.2 NVMe Storage)
- 2x EDGEBoost Bracket

See Product

RCO-3000-CML Small Form Factor Computer with 10th Gen Intel® Core™ Processor

The RCO-3000-CML series delivers high-performance in spatially restricted deployments with its socket-type design within a compact chassis. Although small, this SFF industrial computer provides plentiful IIoT-centric I/O.

- 10th Gen Intel® Core™ Processor
- Max. 64GB DDR4 RAM
- 2x SATA SSD Bay (1x External Hot-Swappable, 1x Internal)
- On-board M.2 E-Key & M.2 B-Key
- 1x EDGEBoost Bracket

See Product

RCO-3000-CFL Small Form Factor Computer with 9th Gen Intel® Core™ Processor

The RCO-3000-CFL series delivers high-performance in spatially restricted deployments with its socket-type design within a compact chassis. Although small, this SFF industrial computer provides plentiful IIoT-centric I/O.

- 9th Gen Intel® Core™ Processor
- Max. 64GB DDR4 RAM
- 2x SATA SSD Bay (1x External Hot-Swappable, 1x Internal)
- On-board M.2 E-Key
- 1x EDGEBoost Bracket

See Product

ACO-6000-KBL In-Vehicle Computer with 7th Gen Intel® Core™ Processor

The ACO-6000-KBL series provides plentiful I/O connectivity (up to 16) and is certified for seamless integration into embedded automotive applications.

- 7th Gen Intel® Core™ Processor
- Max. 32GB DDR4 RAM
- 4x SATA SSD Bay (2x External Hot-Swappable, 2x Internal)
- Up to 16x IoT Ports
- 2x EDGEBoost Bracket

See Product