INDUSTRIAL TOUCH SCREEN COMPUTER

SIO-215-J1900

15" Stainless Steel Panel PC with Intel® Celeron® J1900

Features

- 15" TFT XGA 4:3 LCD with resistive 5-wire / projected capacitive touch
- Intel® Celeron® processor J1900, 2.0 GHz
- 1x 204-pin DDR3L SODIMM. max up to 8GB
- 1x mSATA
- M12 2x LAN, 4x USB, 2x COM
- 1x Full-size Mini PCIe for expansion
- Support 110V to 240V AC power input
- Fanless Operation from -20°C to 55°C
- Full system IP66/IP69K with Stainless Steel SUS316 construction
- Scratch-resistant and Wear-resistant 7H Tempered Glass
- Optical Bonding for ultimate clarity
- Pressure Valve SUS316 VENT

Specifications

Display	
IP Rating	IP66/IP69K
LCD Size	15" (4:3)
Max. Resolution	1024 x 768
Brightness (cd/m^2)	300
Contrast Ratio	2500:1
LCD Color	16.7M
Pixel Pitch (mm)	0.297 (H) x 0.297 (V)
Surface hardness	>3H
Response time	16ms
Viewing Angle	88 /88 /88 /88 (Typ.) (CR>=10)
Backlight MTBF	70000 hrs (LED Backlight)
Operating Temperature	-20°C to 70°C
Storage Temp.	-30°C to 70°C

Touch	
Surface hardness	Resistive 5-wire >3H Projected Capacitive 7H
Touch points	Resistive Single point Projected Capacitive 2 point
Impact absorption	Projected Capacitive IK07

System	
Processor	Intel® Celeron® Processor J1900, Quad Core, 2MB Cache, 2.0 GHz
System Chipset	SoC Integrated
LAN Chipset	GbE1: Intel® I210-IT (Support Wake-on-LAN and PXE) GbE2: Intel® I210-IT (Support Wake-on-LAN and PXE)
Audio Codec	Realtek ALC886
System Memory	1x 204-pin DDR3L SODIMM. max up to 8GB

Storage	
mSATA	1x mSATA
SIM Socket	1x Internal SIM socket

Expansion	
Mini PCIe	1x Full-size Mini PCIe

I/O	
COM	2x RS-232/422/485 by M12 A-Code 8-pin
LAN	2x LAN by M12 X-Code 8-pin
USB	4x USB 2.0 by M12 A-code 8-pin
Others	2x WiFi Antenna (Optional) Power On/Off, Reset IP68/IP69K SUS 316 Vent

Operating System	
Windows	Windows 10, Windows 7, WES7
Linux	Linux kernel 5.X

Power	
Power Mode	ATX
Power Supply Voltage	110 ~ 240V AC Input
Power Connector	M12 S-code 4-pin

Environment	
Operating Temperature	-20°C to 55°C optional wide Temp. -20°C to 60°C
Storage Temperature	-20°C to 70°C
Relative Humidity	10% ~ 80% (non-condensing)
IP Level	Full System IP66/IP69K
Certification	CE, FCC Class A
Vibration	With SSD: 2.4 Grms, 5 - 500 Hz, 0.5 hr/axis With HDD: 1 Grms, 5 - 500 Hz, 0.5 hr/axis
Shock	With SSD: 20G, half sine, 11ms

Physical	
Dimensions	385 (W) x 310 (H) x 49.5 (D) mm
Weights	5.96 kg
Construction	Stainless Steel SUS316 with Optical bonding
Mounting Options	VESA Mounting Holes 100 x 100mm Optional Yoke Mount, Panel Mount

* All specifications and photos are subject to change without notice.

External I/O Mechanical Layout

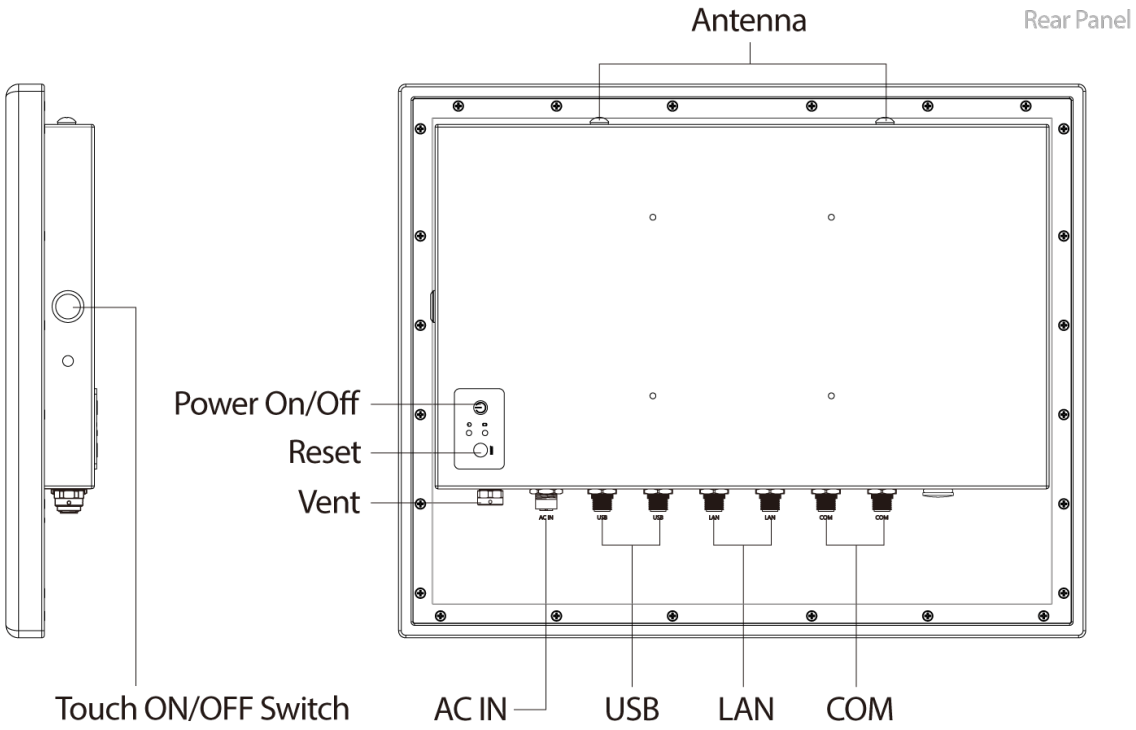

Dimension

Unit: mm

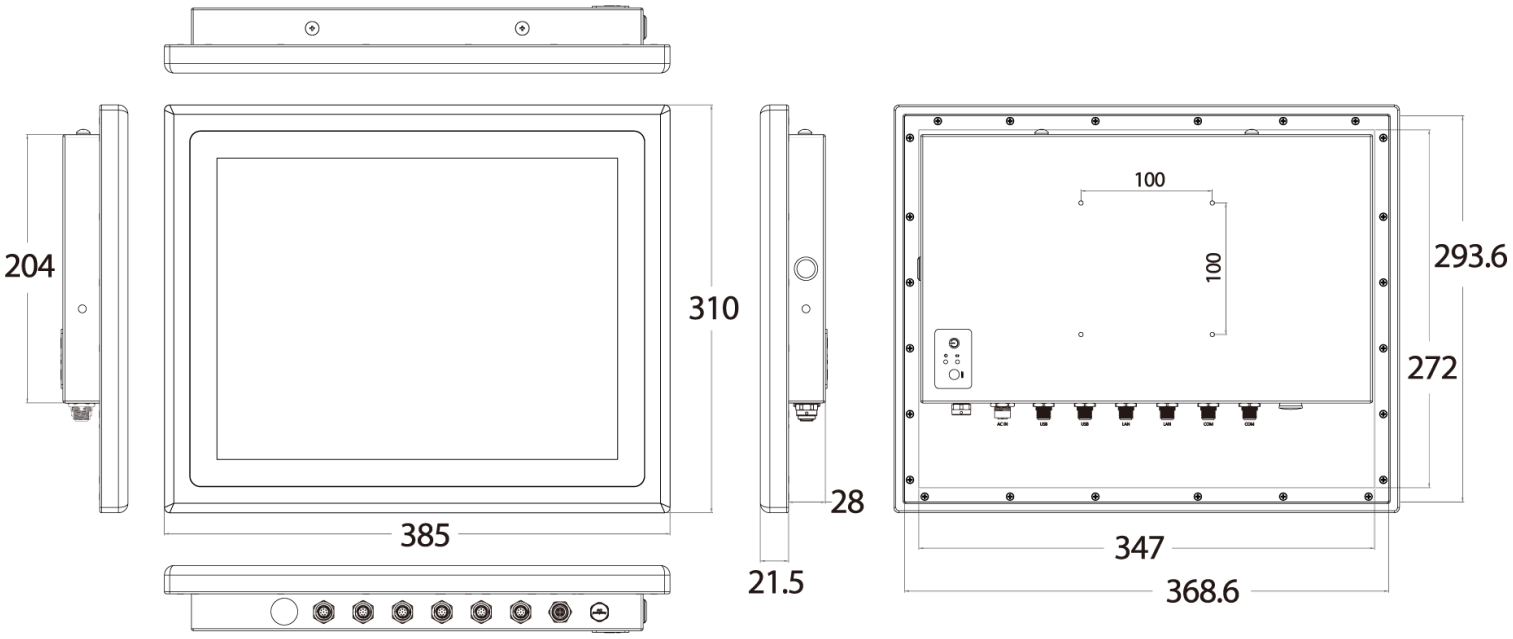

Available Models

Model No.	Description
SIO-215C-J1900-P2	15" XGA Capacitive Touch Stainless Steel Panel PC with Celeron Processor J1900, AC IN, Optical bonding
SIO-215R-J1900-P2	15" XGA Resistive Touch Stainless Steel Panel PC with Celeron Processor J1900, AC IN, Optical bonding

Optional Accessories

Model No.	Description
1-TPWR00092	Waterproof M12 S-CODE 4P PWR Cable(SUS316L) Type_US L=3M
1-TPWR00106	Waterproof M12 S-CODE 4P PWR Cable(SUS316L) Type_EU L=3M
1-TCOM00032	Waterproof M12 A-CODE 8P COM Cable(SUS316L)_DB9 L=1.5M
1-TLAN00024	Waterproof M12 X-CODE 8P LAN Cable(SUS316L)_CAT 5E_RJ45 L=1.5M
1-TUSB00057	Waterproof M12 A-CODE 8P USB 2.0 Cable(SUS316L)_Type A*2 L=1.6M
SIO-CBL-BUNDLE-SUS316	Bundle includes 1-TCOM00032, 1-TLAN00024, and 1-TUSB00057

Packing List

- 1x SIO-215-J1900
- 7x Waterproof Connector Cover Set

Exports And Tariff Codes

ECCN	EAR99
HTS	8528.59.1500
ScheduleB	85.28