Industrial Touch Screen Computer

VIO-215-PC100-BRD-U

15" 4:3 IP65 Industrial Touchscreen Computer with 5th Gen Intel® Core™

Features

- 15" TFT XGA 4:3 LCD with Resistive 5-wire or Projected Capacitive Touch
- Intel® Core™ i5-5350U, i3-5010U, Celeron® 3765U
- 1x 204-pin DDR3L SODIMM, up to 8GB
- 1x 2.5" SATA HDD bay, 2x mSATA
- 2x Full-size mini PCIe, 2x SIM socket
- 2x LAN, 1x VGA, 1x DisplayPort
- Up to 6x RS-232/422/485, up to 3x USB 3.0, 1x USB 2.0, Audio, DIO
- 1x PCIe x4 Expasion Slot
- 1x PCI Expansion Slot
- 9 to 48 VDC wide range power input
- -10 °C to 60 °C extended operating temperature
- IP65 aluminum die-casting front bezel
- Two 10W internal speakers
- Multi-language OSD (rear OSD buttons)
- High Brightness Display and Optical Bonding (Optional)

Specifications

Display Panel	
IP Rating	IP65
LCD Size	15" (4:3)
Max. Resolution	1024 x 768 (XGA)
Brightness (cd/m^2)	350 / 1000 (optional)
Contrast Ratio	700:1
LCD Color	16.2M
Pixel Pitch (mm)	0.297(H) x 0.297(V)
Viewing Angle	170/160
Backlight MTBF	50000 hrs (LED Backlight)
Touch	
Touch Type	VIO-215R-13, VIO-215HR-13, VIO-215HR-13-OB, VIO-215C-13, VIO-215HC-13, VIO-215HC-13-OB
System	
Processor	Intel® Core™ i5-5350U Processor, Dual Core, 3MB Cache, up to 2.9 GHz Intel® Core™ i3-5010U Processor, Dual Core, 3MB Cache, 2.1 GHz Intel® Celeron® Processor 3765U, Dual Core, 2MB Cache, 1.9 GHz
System Chipset	SoC Integrated
LAN Chipset	GbE1 & GbE2: Intel® I210-AT (Support Wake-on-LAN and PXE)
Audio Codec	Realtek ALC888S
System Memory	1x 204-Pin DDR3L 1333/1600MHz SODIMM up to 8GB
BIOS	AMI 128Mbit SPI BIOS
Watchdog	Software Programmable 1~255 sec. System Reset
Storage	
mSATA	2 x mSATA (shared with mini-PCIe, auto-detect)
SIM Socket	2x External SIM socket
SSD/HDD	1 x Hotswap 2.5" SATA HDD bay
Expansion	
Mini PCIe	1x Full-size Mini PCIe Socket with USIM Socket (PCIe + USB + SATA) 1x Full-size Mini PCIe Socket with USIM Socket (PCIe + USB)
PCI	1xPCI
PCIe	1x PCIe x4
I/O	
Audio	1x Mic-In, 1x Speaker-out (5W+5W)
COM	2x RS-232/422/485 2x RS-232/422/485 (internal)
DIO	4 in / 4 out (Isolated)
LAN	2x RJ45
USB	3x USB 3.0 1x USB 2.0
Others	3x Antenna 1x Power Switch 1x AT/ATX Switch 1x Remote Power On/Off
VGA	1x VGA (or 1x DVI-D by Order)
Optical Bonding	Optional, contact us for more information
OSD	LCD On/Off, Auto, Menu, Up and Down Multi-language
Speaker	AMP 10W + 10W
Power	
Power Adapter	Optional External Power Adapter, 60W or 120W
Power Management	Power Ignition Management
Power Mode	AT/ATX Select Switch; PC/Vehicle Select Switch
Power Supply Voltage	9~48 VDC
Power Connector	3-Pin Terminal Blcok
Power Protection	OVP (Over Voltage Protection) OCP (Over Current Protection) Reverse Protection
Environment	
Operating Temperature	-10 °C to 60 °C (14 °F to 140 °F)
Storage Temperature	-20 °C to 70 °C (-4 °F to 158 °F)
Relative Humidity	10% ~ 80% (non-condensing)
IP Level	IP 65 Compliant Front Panel
Certification	CE, FCC Class A
Physical	
Dimensions	VIO-215-PC100-BRD-U: 377 x 301 x 64.7 mm (13.3" x 11.9" x 2.5") with PC100-BRD-U module VIO-215-PC100-BRD-U-1E: 377 x 301 x 86.7 mm (13.3" x 11.9" x 3.41") with PC100-BRD-U-1E (1x PCIe x4) module VIO-215-PC100-BRD-U-1I: 377 x 301 x 86.7 mm (13.3" x 11.9" x 3.41") with PC100-BRD-U-1I (1x PCI) module
Weights	VIO-215-PC100-BRD-U: 5.9 kg (13.0 lb) VIO-215x-PC100-BRD-U-1E: 6.3 kg (13.9 lb) VIO-215-PC100-BRD-U-1I: 6.3 kg (13.9 lb)

* All specifications and photos are subject to change without notice.

External I/O Mechanical Layout

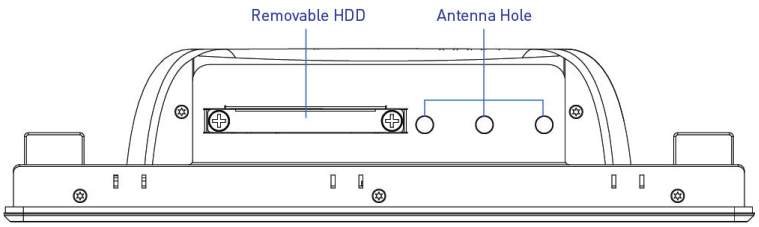

Front I/O

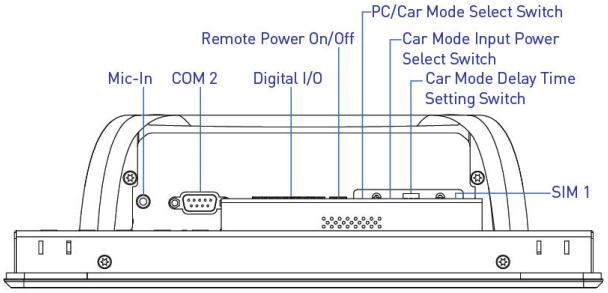

Left I/O

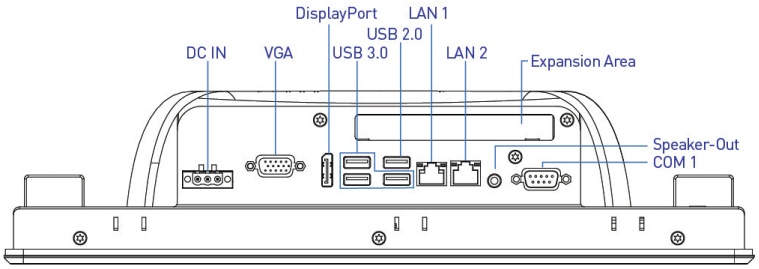

Rear I/O

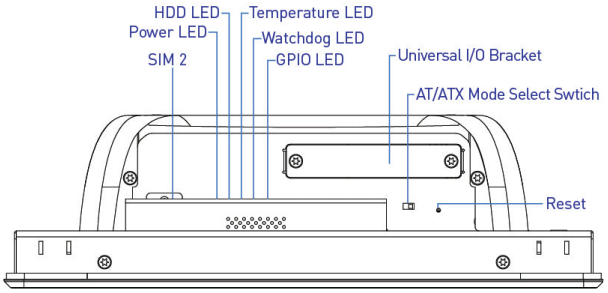

Right I/O

Dimension

Unit: mm

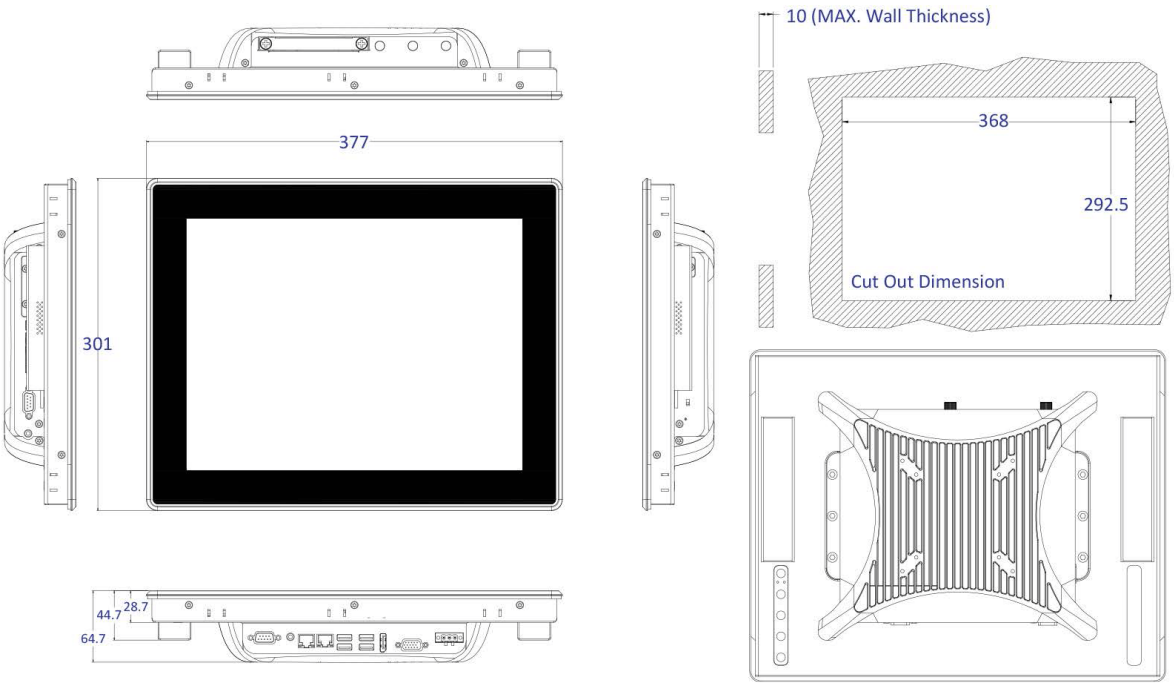

External I/O Mechanical Layout

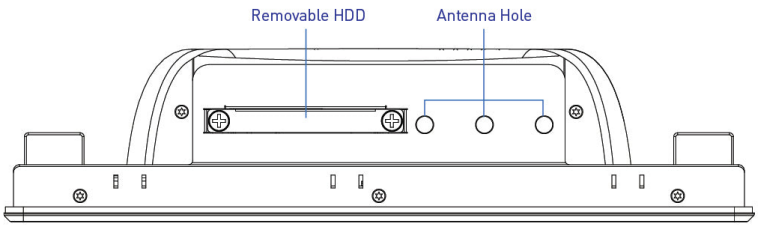

Front I/O

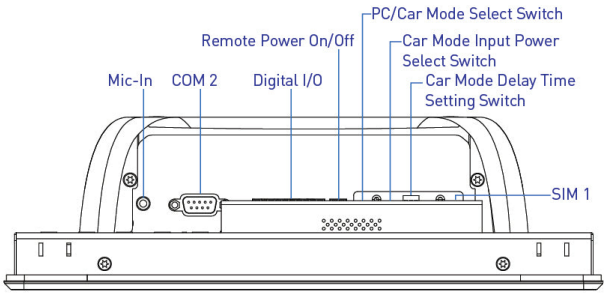

Left I/O

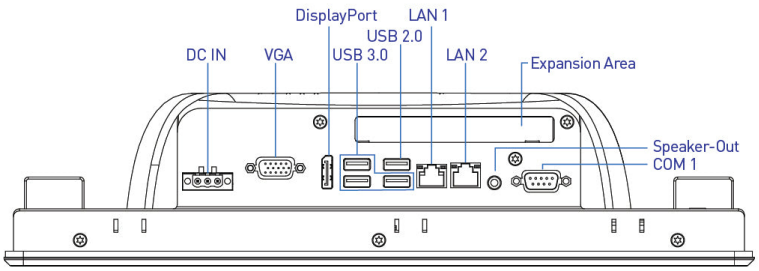

Rear I/O

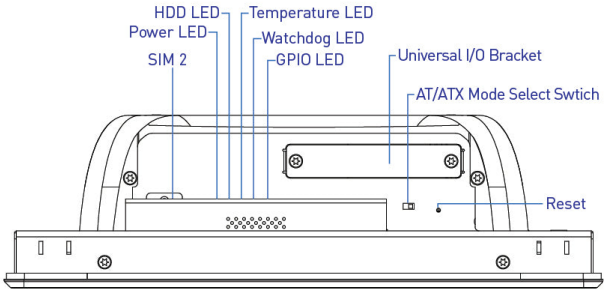

Right I/O

Dimension

Unit: mm

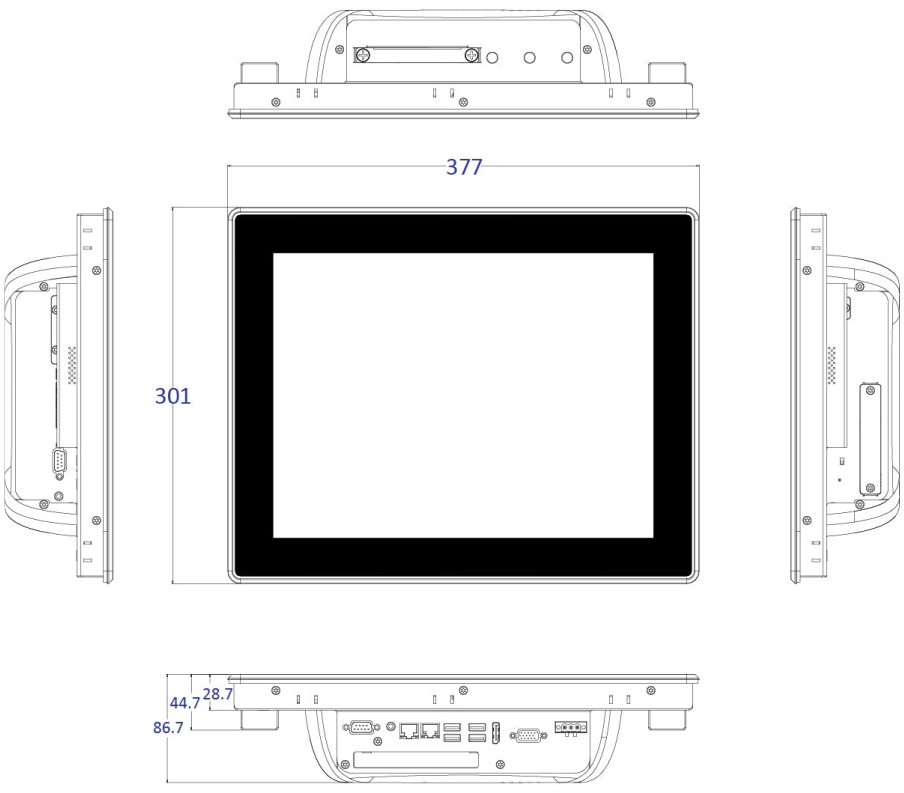

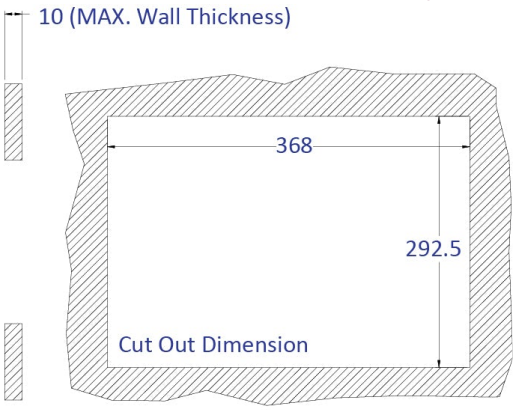

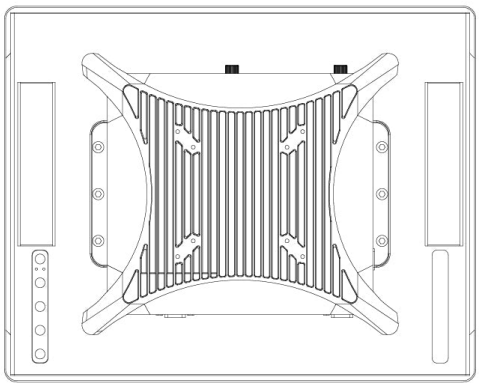

Available Models

Model No.	Description
VIO-215C-13	15" Thin Frame Display Module, XGA, Capacitive, 2x 10W Speaker
VIO-215HC-13	15" Thin Frame Display Module, XGA, Capacitive, High Brigtness, 2x 10w Speaker, V13
VIO-215HC-13-OB	15" Thin Frame Display Module, XGA, Capacitive, High Brigtness, Optical Bonding, 2x 10w Speaker, V13
VIO-215HR-13	15" Thin Frame Display Module, XGA, Resistive, High Brigtness, 2x 10w Speaker, V13
VIO-215HR-13-OB	15" Thin Frame Display Module, XGA, Resistive, High Brigtness, Optical Bonding, 2x 10w Speaker, V13
VIO-215R-13	15" Thin Frame Display Module, XGA, Resistive, 2x 10W Speaker
PC100-BRD-3765U-1E-P	PC Module for Industrial Display System with Intel Celeron 3765U Processor, 1x PCIe x4 Expansion
PC100-BRD-3765U-1I-P	PC Module for Industrial Display System with Intel Celeron 3765U Processor, 1x PCI Expansion
PC100-BRD-3765U-P	PC Module for Industrial Display System with Intel Celeron 3765U Processor
PC100-BRD-5010U-1E-P	PC Module for Industrial Display System with Intel i3-5010U Processor, 1x PCIe x4 Expansion
PC100-BRD-5010U-1I-P	PC Module for Industrial Display System with Intel i3-5010U Processor, 1x PCI Expansion
PC100-BRD-5010U-P	PC Module for Industrial Display System with Intel i3-5010U Processor
PC100-BRD-5350U-1E-P	PC Module for Industrial Display System with Intel i5-5350U Processor, 1x PCIe x4 Expansion
PC100-BRD-5350U-1I-P	PC Module for Industrial Display System with Intel i5-5350U Processor, 1x PCI Expansion
PC100-BRD-5350U-P	PC Module for Industrial Display System with Intel i5-5350U Processor

Optional Accessories

Model No.	Description
1-E09A22801	Adapter AC/DC 24V/11.67A 280W with 3pin Terminal Block Plug 5.0mm Pitch
1-E09A22102	Adapter AC/DC 24V 9.2A 220W with 3pin Terminal Block Plug 5.0mm Pitch
999930	Power Cord, 3-pin US Type, 180cm
1-TPCD00002	Power Cord, European Type, 180cm
1-TPCD00001	Power Cord, 3-pin UK Type, 180cm

Packing List

- 1x VIO-215-PC100-BRD-U
- 1x Utility DVD Driver
- 10x Panel Mount Kit
- 1x Screw Pack

Exports And Tariff Codes

ECCN	5A992.c
HTS	8471.50.0150
Schedule B	84.71

Premio Inc.
918 Radecki Ct., City of Industry, CA 91748
Toll Free: 800.977.3646
Email: sales@premioinc.com
https://premioinc.com