RCO-3211E-4P-M12

Advanced Fanless System with Intel® Pentium® Processor N4200,
2x LAN, 4x M12 PoE, 1x PCIe Expansion

FEATURES

- Intel® Pentium® Processor N4200, Quad Core, 2MB Cache, 2.5 GHz
- 1x 204-pin DDR3L SODIMM. max up to 8GB (un-buffered and non-ECC)
- Triple independent display supported by 1x DVI-I and 1x DisplayPort
- 2x Intel® GbE supporting Wake-on-LAN and PXE
- 4x Intel® GbE with M12 PoE function
- 2x 2.5" SATA HDD bay, 1x mSATA, 1x CFast
- 2x full-size Mini PCIe for communication or expansion modules, 2x SIM socket
- 6x RS-232/422/485 (w/ 4x internal), 2x USB 3.0, 2x USB 2.0
- 1x PCIe x4 expansion, 2x universal bracket (for mini PCIe application)
- 8x DI + 8x DO with isolation
- 9 to 50VDC wide range power input supporting AT/ATX mode
- -40°C to 70°C extended operating temperature

SPECIFICATIONS

SYSTEM	
Processor	Intel® Pentium® Processor N4200, Quad Core, 2MB Cache, 2.5 GHz
System Chipset	SoC integrated
LAN Chipset	GbE1 & GbE2: Intel® I210-AT (Support Wake-on-LAN and PXE) GbE3~GbE6: Intel® I210-AT
Audio Codec	Realtek ALC888S
System Memory	1x 204-Pin DDR3L 1600/1867MHz SODIMM. Max. up to 8 GB (un-buffered and non-ECC)
BIOS	AMI 128Mbit SPI BIOS
Watchdog	Software Programmable Supports 1~255 sec. System Reset
DISPLAY	
VGA	Yes (by optional split cable)
DVI	1x DVI-I
DisplayPort	1x DisplayPort
Multiple Display	Triple Display
STORAGE	
SSD/HDD	1x Internal 2.5" SATA HDD Bay 1x Removable 2.5" SATA HDD Bay
mSATA	1x mSATA (shared by 1x Mini PCI Express & 1x SATA)
CFast	1x CFast (shared by 1x mSATA & 1x SATA)
SIM Socket	2x External SIM socket
EXPANSION	
Mini PCIe	1x Full-size Mini PCIe Socket with USIM socket (USB + SATA) (Share by 1x SATA) 1x Full-size Mini PCIe Socket with USIM socket (PCIe + USB)
PCI Express	1x PCIe x4 slot with 1-lane Gen2 PCIe Signal
I/O	
COM	2x RS-232/422/485 4x RS-232/422/485 (internal)
USB	2x USB 3.0, 2x USB 2.0
LAN	2X RJ45
PoE	4x 25.5W_M12 (module) 40W total power budget
Audio	1x Mic-in, 1x Line-out
DIO	8 in / 8 out (Isolated)
Universal I/O Bracket	2x Universal I/O Bracket (By mini PCIe interface)
Others	4x WiFi Antenna Holes 1x Power Switch, 1x AT/ATX Switch, 1x Remote Power On/Off
OPERATING SYSTEM	
Windows	Windows 10
Linux	Linux kernel 4.X
POWER	
Power Mode	AT, ATX
Power Supply Voltage	9~50VDC
Power Ignition Sensing	Power Ignition Management
Power Connector	3-pin Terminal Block
Power Adaptor	Optional AC/DC 24V/5A, 120W
Power Protection	OVP (Over Voltage Protection) OCP (Over Current Protection) Reverse Protection
ENVIRONMENT	
Operating Temp.	-40°C to 70°C
Storage Temp.	-40°C to 85°C
Relative Humidity	10% to 95% (non-condensing)
Vibration	With SSD: 5 Grms, 5 - 500 Hz, 0.5 hr/axis With HDD: 1 Grms, 5 - 500 Hz, 0.5 hr/axis
Shock	With SSD: 50G, half sine, 11ms
Standards / Certification	CE, FCC Class A
PHYSICAL	
Construction	Extruded Aluminum with Heavy Duty Metal
Dimension	185 (W) x 197 (D) x 84.9 (H) mm
Weight	TBD
Mounting	Wall Mounting

* For detailed performance specification, please refer to the data sheet or consult with the technical team.

† The environmental specfication covers the bare bone systems and does not include other components environmental specification.

EXTERNAL I/O MECHANICAL LAYOUT

Front Panel

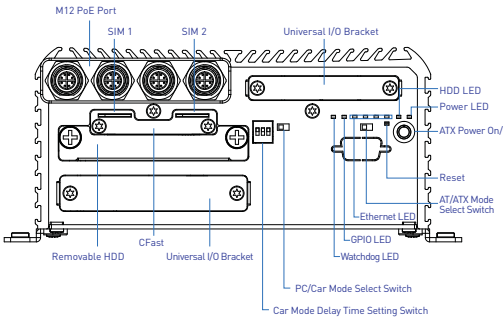

Rear Panel

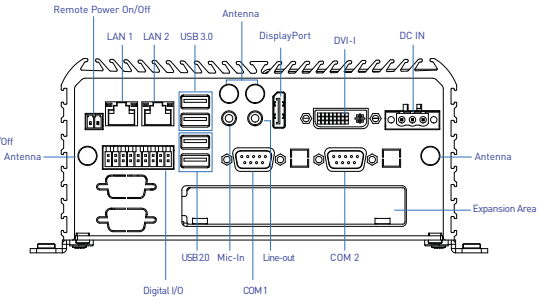

DIMENSION

Unit: mm

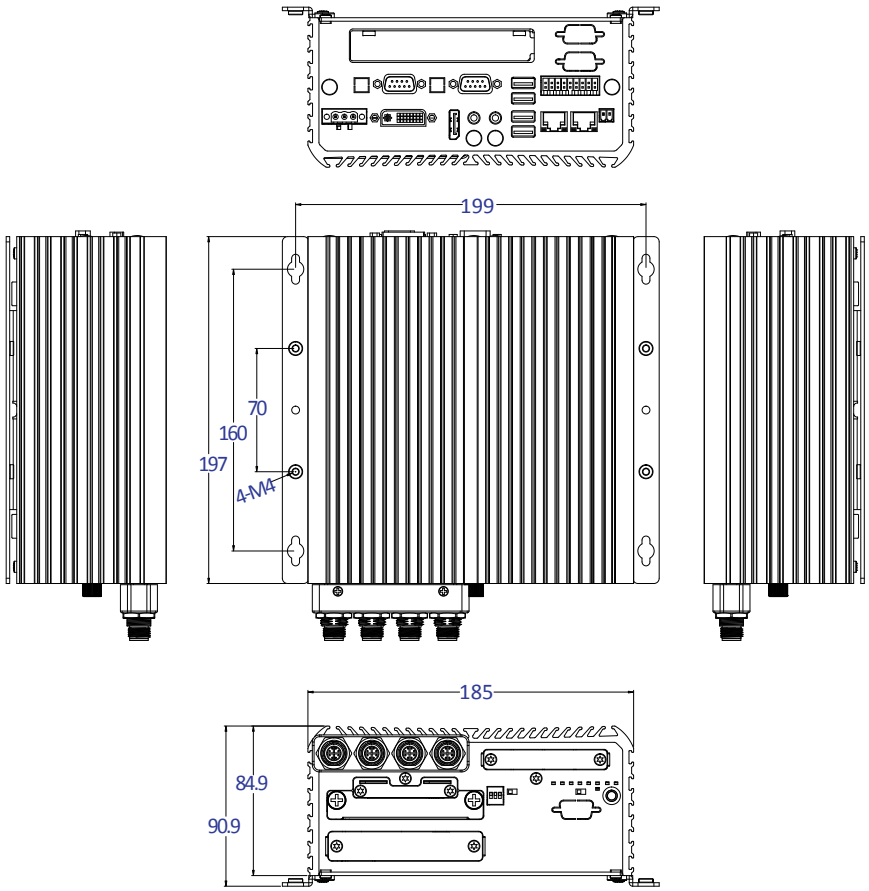

AVAILABLE MODELS

MODEL NO.	DESCRIPTION
RCO-3211E-4P-M12-N4200	Advanced Fanless Embedded System with Intel® Pentium® Processor N4200, 2x LAN, 4x M12 PoE, 1x PCIe Expansion Slot

OPTIONAL ACCESSORIES

MODEL NO.	DESCRIPTION
1-E09A12002	Adapter AC/DC 24V 5A 120W with 3pin Terminal Block Plug 5.0mm Pitch
SFICBL022	Power Cord, 3-pin US Type, 180cm
1-TPCD00002	Power Cord, European Type
1-TPCD00001	Power Cord, 3-pin UK Type, 180cm

PACKING LIST

- 1x RCO-3200 Series Embedded System
- 1x Utility DVD Driver
- 1x Wall Mount Kit
- 1x Accessory Kit
- 1x DVI to VGA Adapter